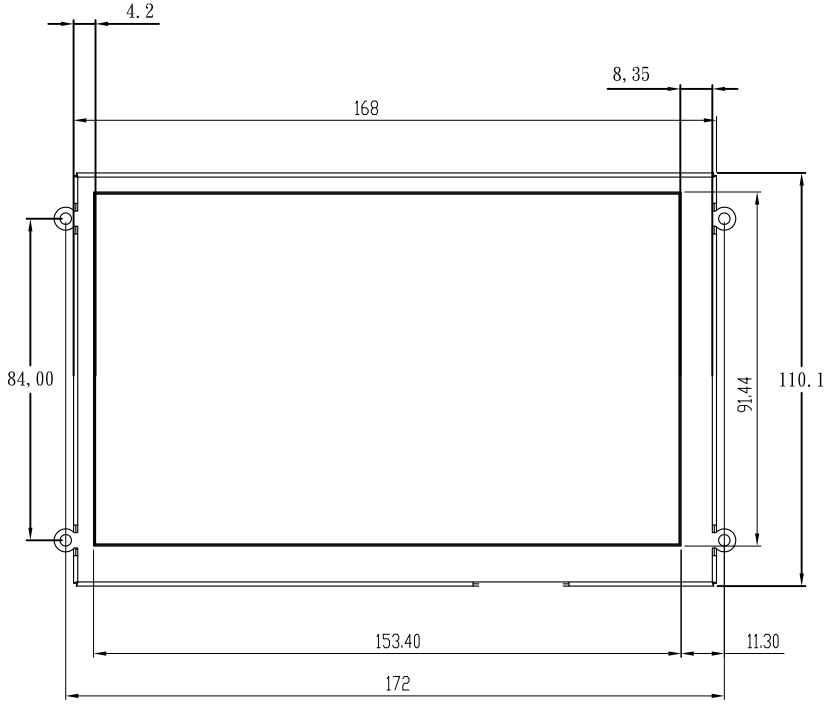
4.2
8,35
168
84,00
91.44
110.1
153.40
11.30
172

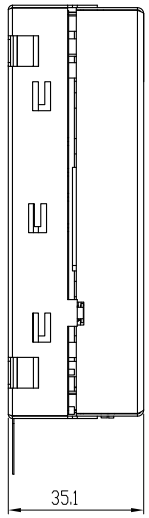
35.1